PROJECT REPORT

Wireless Smart Farming System

Academy of Future Robotics

Course Name: Arduino Advanced Course September 2025

Submitted by: H.G. Chanuka Dilshan Register Number: 0925ARD1400 Date: 22.03.2026

Catalog

1. What is This Project? 3
2.How the Whole System Works 4
3.How Do the Parts Talk to Each Other? 5
4. Node A 6
DHT11 - Temperature and Humidity 6
Soil Moisture Sensors 6
PIR Motion Sensor 6
4. Node B 7
4.2 How Logic level Shiffter works 7
4.3 The Water System works 8
Pump A (Main water source) 8
5. Display Unit Arduino uno 9
6. System Flowchart 10
7. Power Section 11
7.1 Adapter 1 11
7.2 Adapter 2 12
7.3 Sample diagrams of power section 13
7.4 How power other sensors? 14
8. ABOUT CODE. 15

1. What is This Project?

This is a smart farming system that uses IoT (Internet of Things) technology. The system automatically waters the plants and shows all the sensor data on a screen — without a person having to do anything.

The main things:

- Sensors check the soil, temperature, humidity, and water level.
- If the soil is dry — water the plants automatically.
- If the water tank is low — refill it automatically from the well.
- Show everything on a display screen in real time.
-

No internet. No router. Everything works wirelessly using a technology called ESP-NOW.

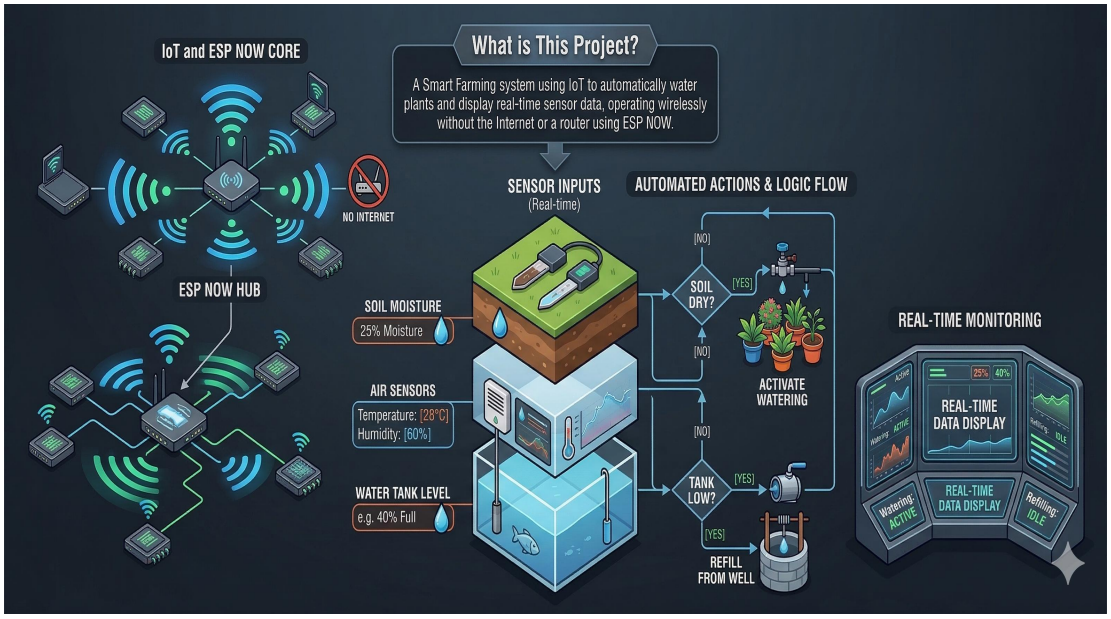

2.How the Whole System Works

The system has 3 main parts that work together:

Parts	How does works
Node A	Reads sensors in the field and sends data wirelessly
Node B	Receives data, makes decisions, controls pumps and valves
Uno + TFT	Shows all sensor values on a screen

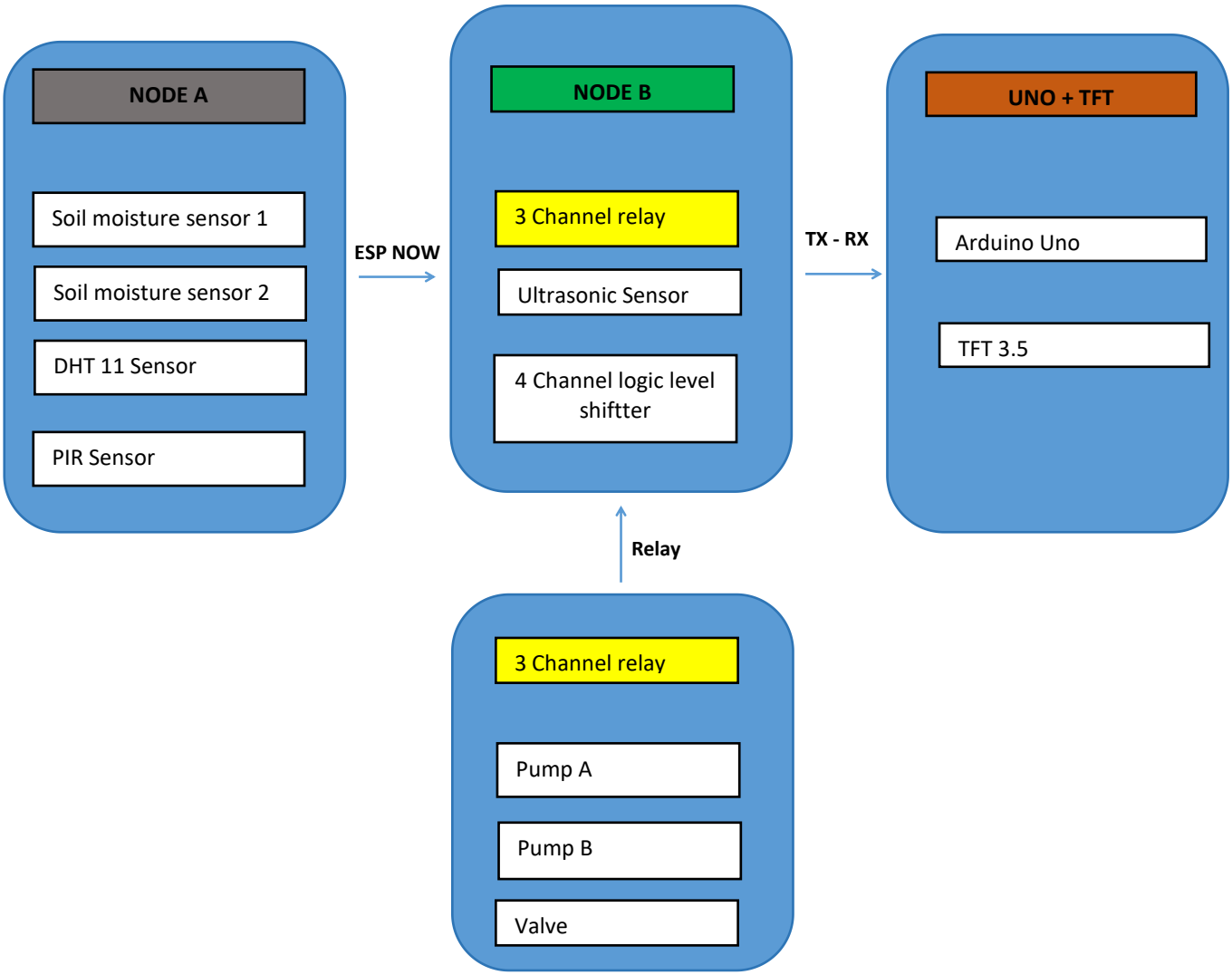

3.How Do the Parts Talk to Each Other?

Node A and Node B talk to each other using a wireless technology called ESP-NOW. This is built into the ESP32 chip. It works like Bluetooth — no Wi-Fi router is needed.

There are two ways Node A can send data to Node B:

- Unicast — sends directly to Node B using its MAC address (like sending a message to one specific person).
- Broadcast — sends to everyone nearby (like shouting in a room). This project uses both methods.

ESP-NOW Feature	Detail
Needs a Router?	No
Range (open area)	Up to 200 meters
Speed (latency)	Less than 10ms
Max data per message	250 bytes
Send modes used	Unicast + Broadcast

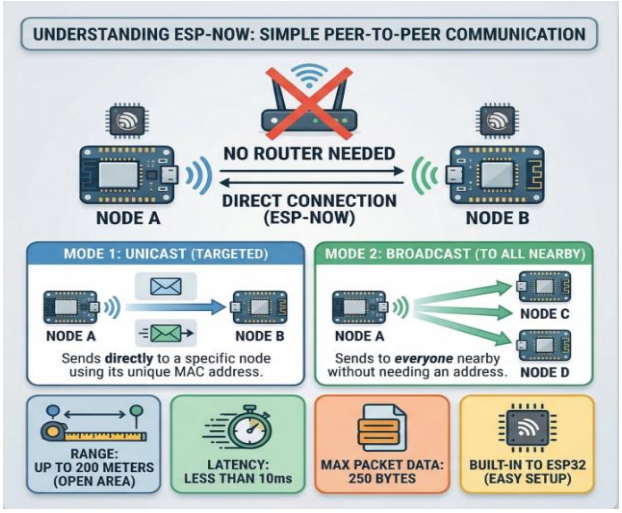

4. Node A

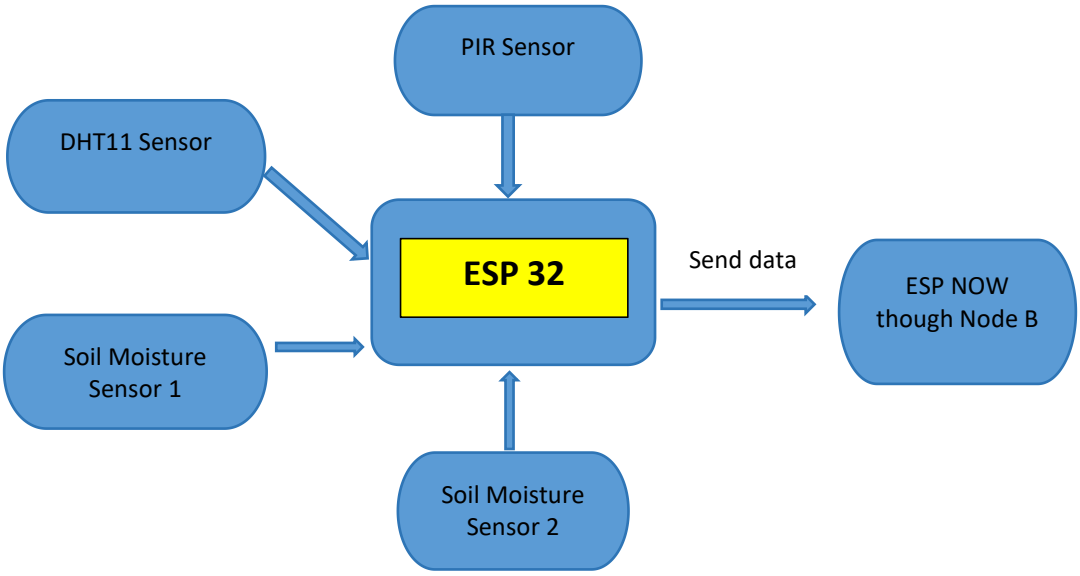

DHT11 - Temperature and Humidity

This small sensor measures how hot and how humid the air is. It connects to GPIO pin 25 on the ESP32.

Soil Moisture Sensors

These two sensors go into the soil. They measure how wet the soil is. They give a number between 0 and 4095. If the number is above 2000, the soil is dry and needs water. They connect to GPIO pins 32 and 33.

PIR Motion Sensor

This sensor detects movement. If an animal or a person walks into the field, it sends an alert. It connects to GPIO pin 26.

Sensor	Pin	Output	When does it trigger?
DHT11	GPIO 25	Digital	Always reading temp + humidity
Soil Sensor 1	GPIO 32	Analog (0–4095)	Value > 2000 means dry soil
Soil Sensor 2	GPIO 33	Analog (0–4095)	Value > 2000 means dry soil
PIR Sensor	GPIO 26	Digital	HIGH = motion detected

4. Node B

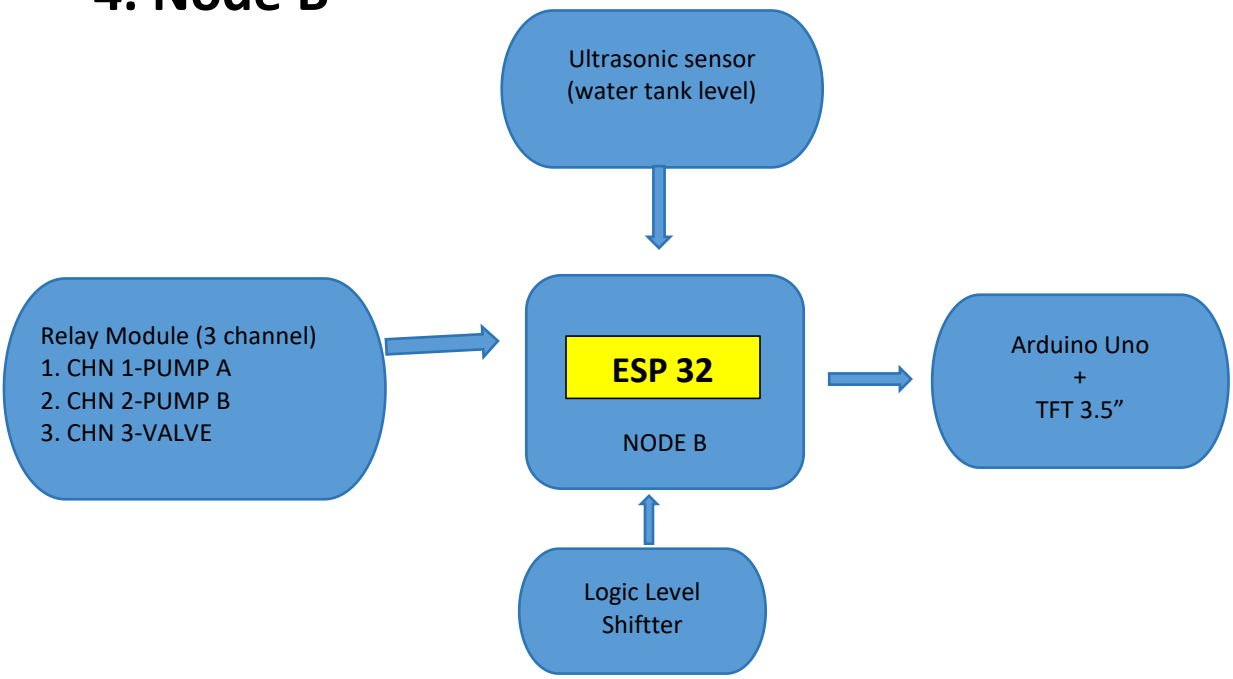

4.2 How Logic level Shiffter works

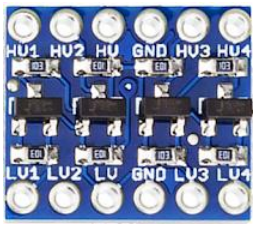

A Logic Level Shifter acts as a bridge that safely connects devices working at different voltages, like changing a 5V signal from an Arduino to a 3.3V signal for an ESP32, so the parts don't get damaged.

- First, we connect 5V to the HV side and 3.3V to the LV side.
- The shifter changes the 3.3V signal from ESP32 TX to a 5V signal for Arduino RX.
- This protects the ESP32 from high voltage damage during data transfer.
- The Ultrasonic sensor (Trig & Echo) is connected only to the ESP32 (Node B), not to the Arduino.

Channel	Signal	Direction	From	To
CH 1	Serial TX data	One-way	ESP32 TX P17	Arduino RX (pin 0)
CH 2	Ultrasonic TRIG	One-way	ESP32 P32	TRIG
CH 3	Ultrasonic ECHO	Two-way	ECHO	ESP32 P33

4.3 The Water System works

There are two pumps and one valve. They are controlled by a 3-channel relay module connected to Node B.

Pump A (Main water source)

Pump A sits in the well (main water source). Above the water tank, there is an ultrasonic sensor pointing down at the water. If the distance from the sensor to the water surface is more than 5 cm, it means the tank is getting empty. So Pump A turns on and fills the tank. When the distance is 5 cm or less, the tank is full and Pump A turns off.

Pump B + Solenoid Valve

Pump B sits inside the water tank. It pumps water out through a solenoid valve to the plants. If the soil moisture reading goes above 2000 (soil is dry), both Pump B and the valve turn on together. Water flows to the plants. When the soil is wet enough, they both turn off

Relays	What is it controling	Turns ON	Turns OF
CHN 1	Pump A (Well)	Tank distance > 5cm	Tank distance ≤ 5cm
CHN 2	Pump B (water tank)	Soil value > 2000	Soil value ≤ 2000
CHN 3	Solenoid Valve	Soil value > 2000	Soil value ≤ 2000

5. Display Unit Arduino uno

The Display Unit shows all the sensor readings on a 3.5 inch colour TFT LCD screen. It uses an Arduino Uno board to receive the data from Node B and update the screen every second.

Node B sends the data through the logic level shifter to the Arduino. The Arduino only receives data — it never sends anything back to Node B. This is called one-way (uni-directional) communication.

Display	**Where it comes from**
Temperature	DHT11 sensor on node A
Humidity	DHT11 sensor on node A
Soil Moisture 1	Soil sensor 1 on mode A
Soil Moisture 2	Soil sensor 2 on node A
Water tank level	Ultrasonic sensor on node B
Pump A	Relay channel 1 state
Pump B + valve	Relay channels 2 and 3
Motion alert	PIR sensor on node A

6. System Flowchart

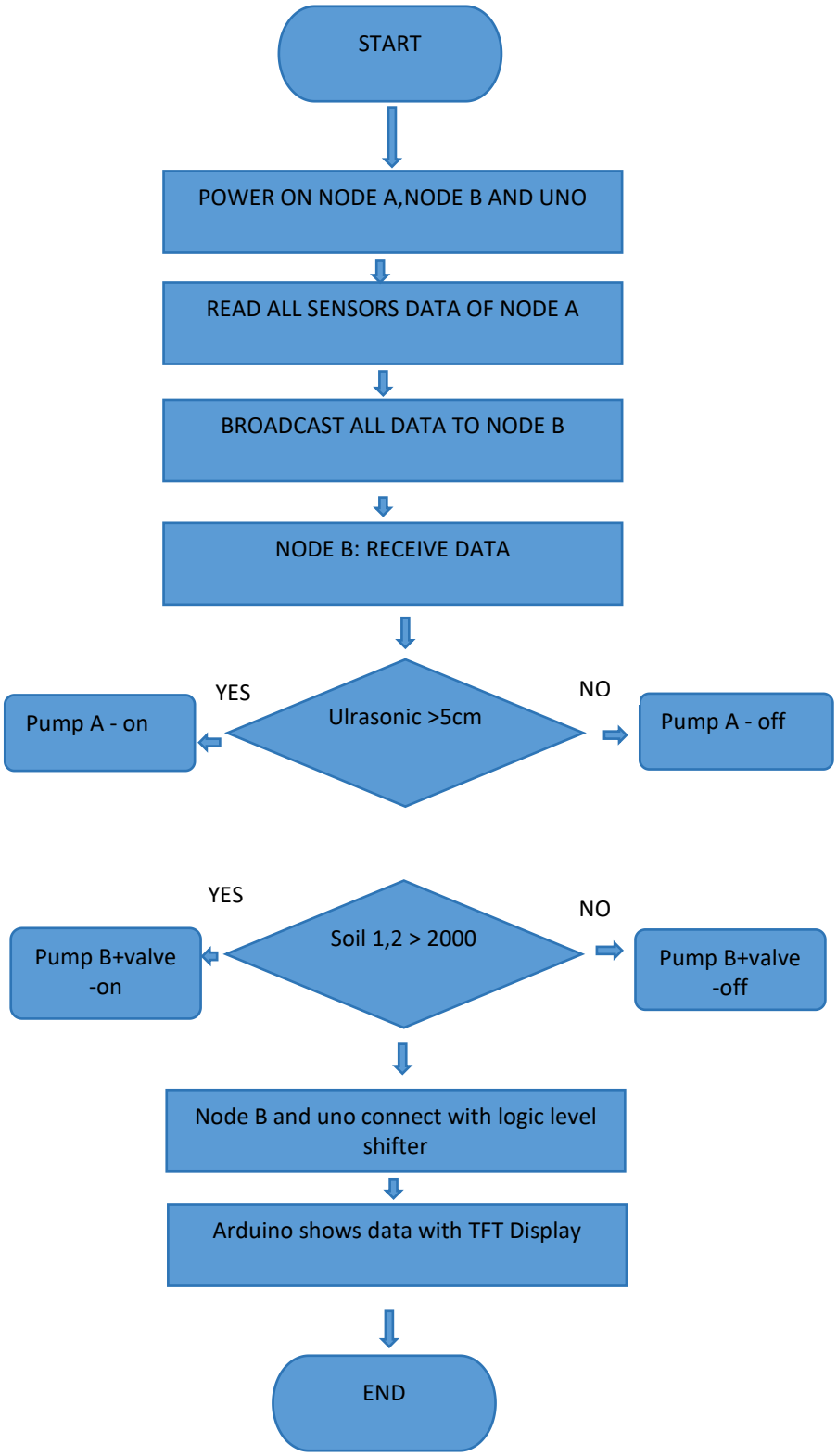

7. Power Section

The system is powered by two 12V / 2A DC adapters. Each adapter feeds a separate power path. All components get a clean, stable voltage through buck converters, voltage regulators, and a breadboard power module.

7.1 Adapter 1

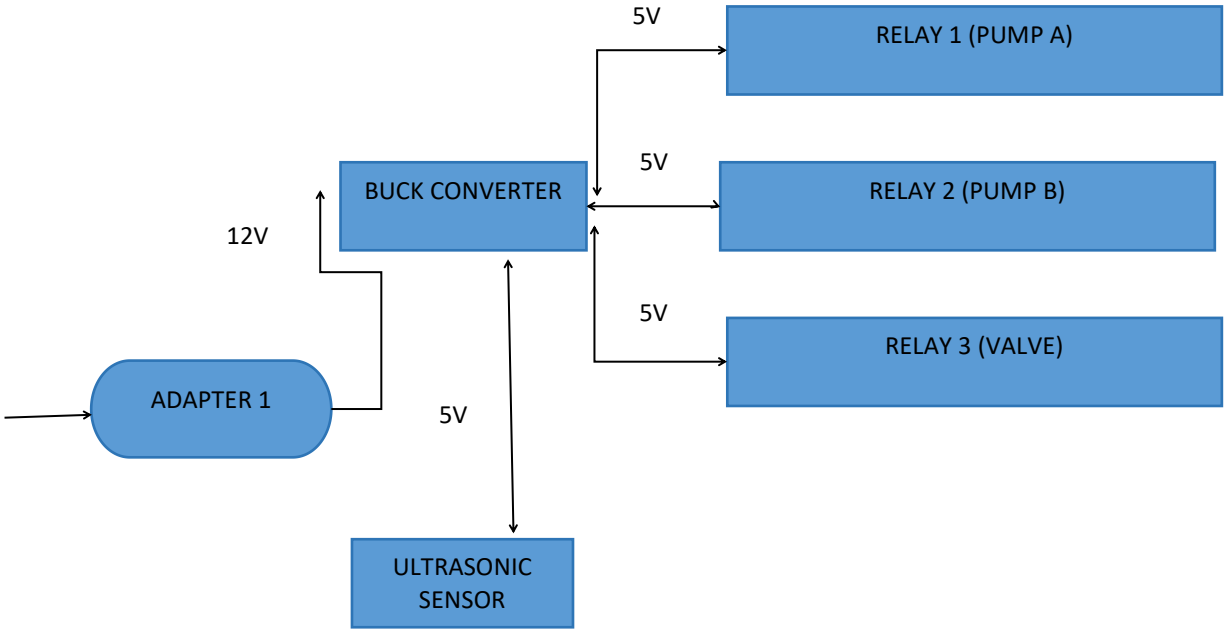

Component	Voltage	Notes
Pump A	5V	Fills the water tank from the well
Pump B	5V	Sends water to the field
Solenoid Valve	5V	Opens to let water flow to the field
Ultrasonic	5V	Measures the water level in the tank

7.2 Adapter 2

This adapter powers the microcontrollers Node A, Node B, Arduino uno + TFT display, and the logic level shifter. It splits into two paths — a buck converter and a breadboard power module.

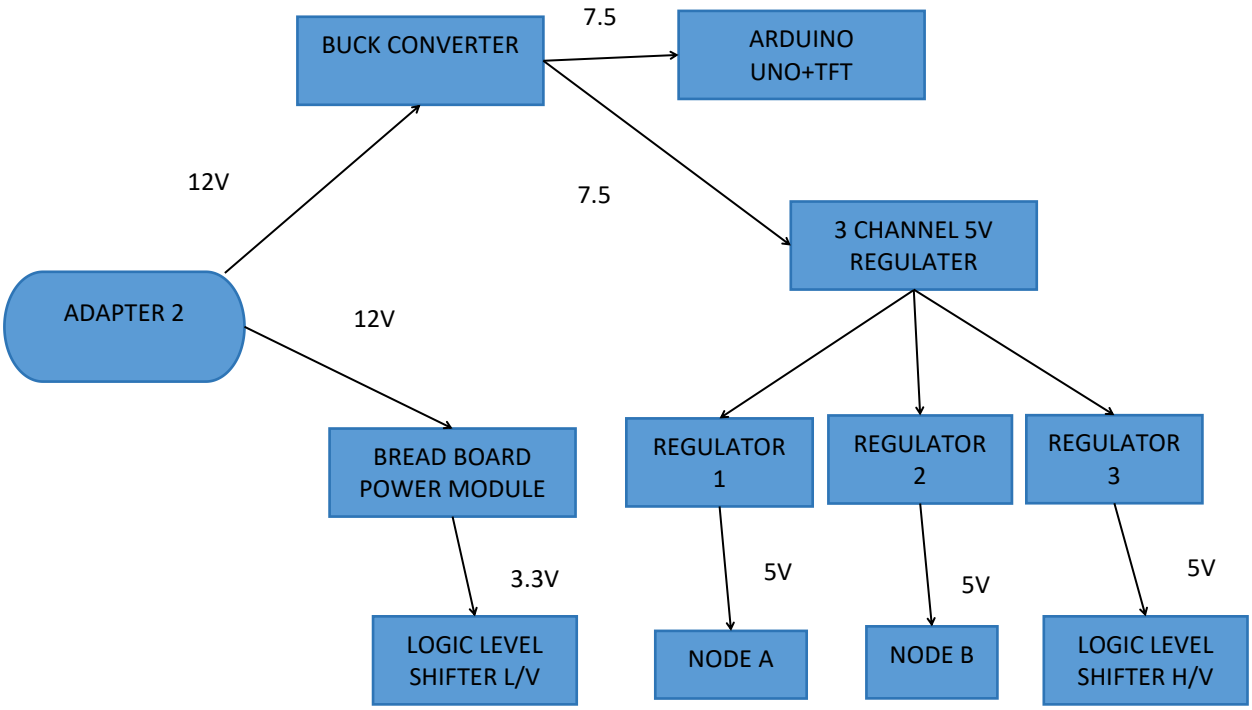

Regulator	Voltage	Powers
Regulator 1	5V	Node A Vin pin
Regulator 2	5V	Node B Vin pin)
Regulator 3	5V	Logic Level Shifter HV side

- Breadboard power module takes the 12V input and outputs a stable 3.3V. This 3.3V is used for one specific job only, powering the LV (low voltage) side of the Logic Level Shifter

7.3 Sample diagrams of power section

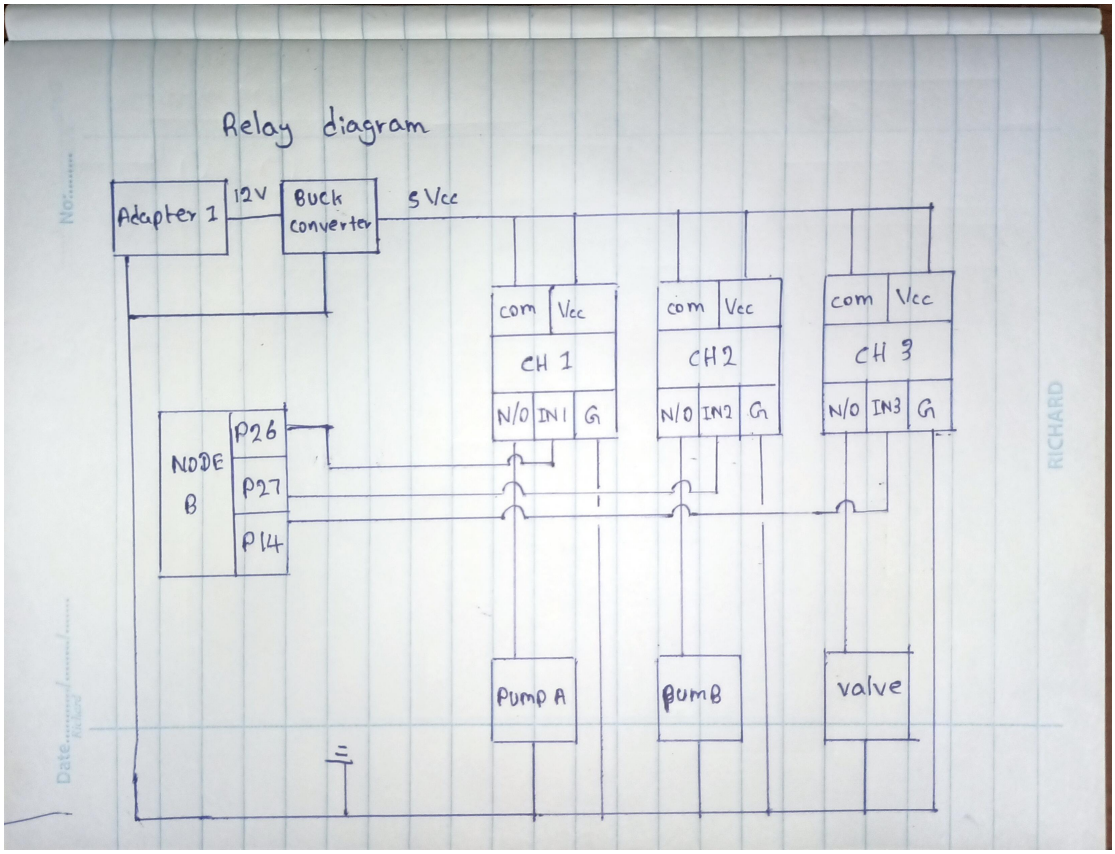

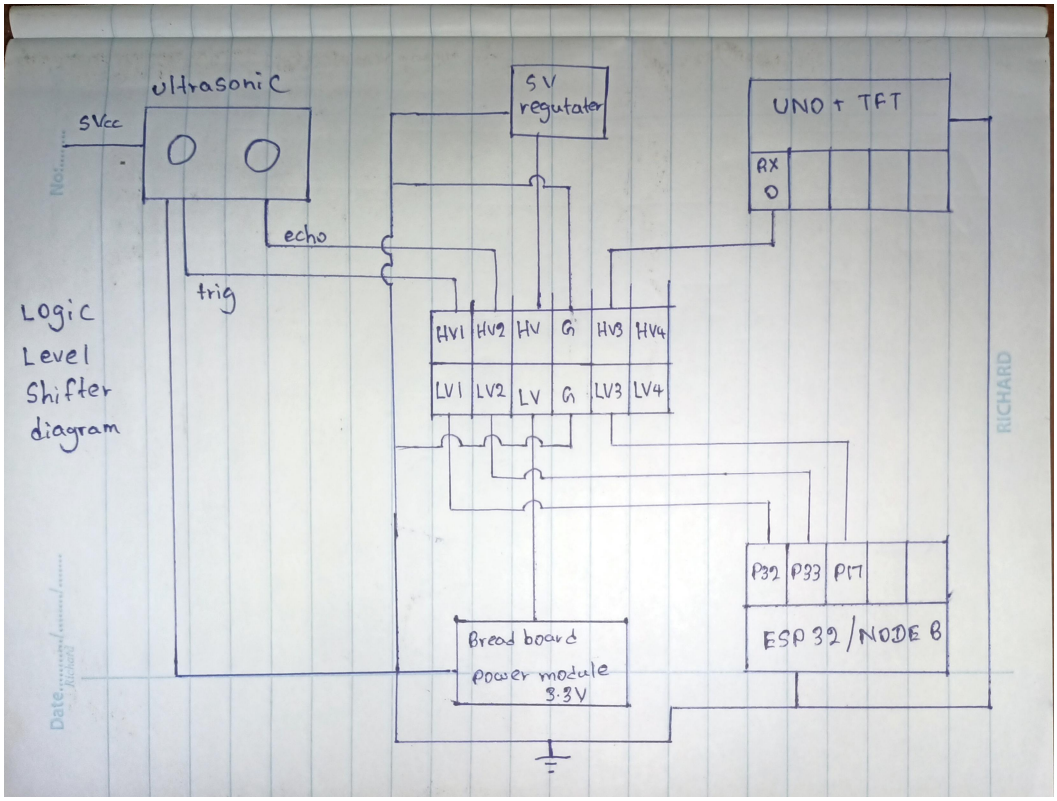

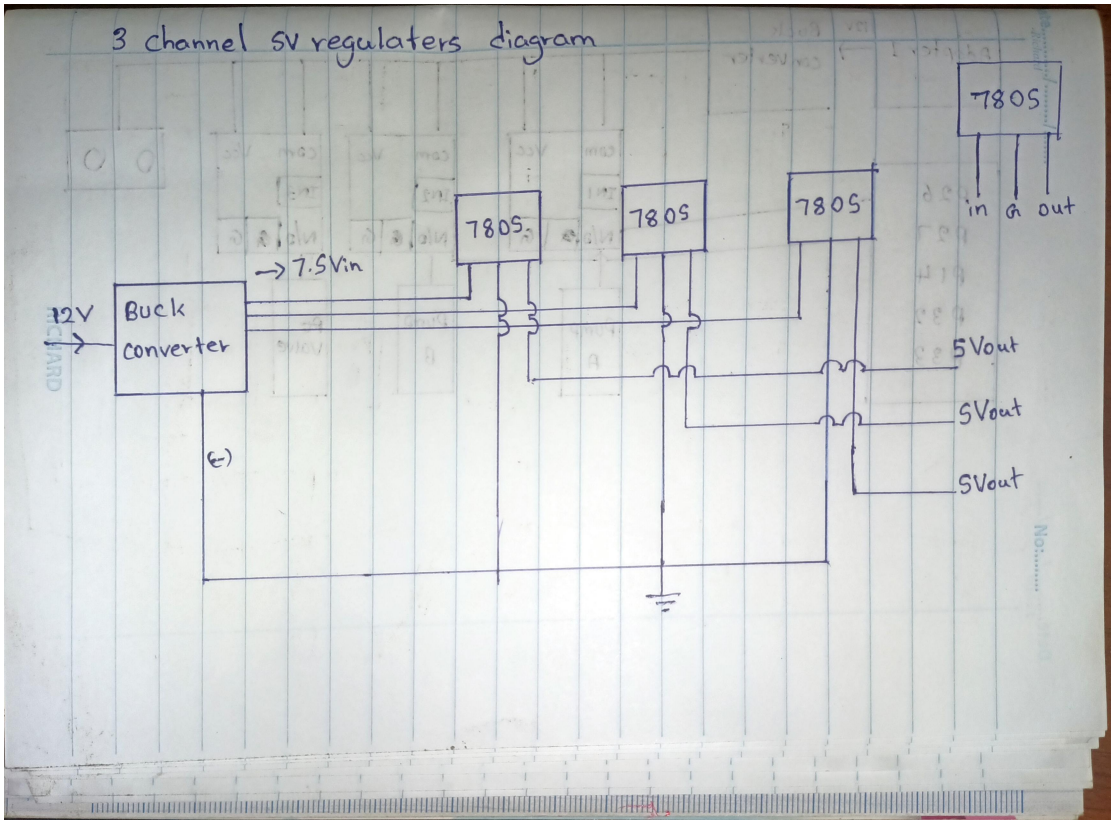

7.4 How power other sensors?

- Node A provides power to all four sensors. PIR sensor is powered from the 5V (VIN) pin, while DHT11 and both Soil Moisture sensors are powered from the 3.3V pin.

- Node B (ESP32) includes a buzzer connected to p16. which is activated when the PIR motion sensor detects movement in the field.

8. ABOUT CODE.

- **HOW TO FIND MAC ADDRESS?**

```
#include <WiFi.h>

void setup() {
  Serial.begin(115200);
  Serial.println(WiFi.macAddress());
}
void loop() {}
```

- The ESP-NOW struct was tricky too. Both Node A and Node B must have the exact same struct. If anything is different, the sensor values come out wrong and no error shows up in the code.

```
struct Data {
  int soil1;
  int soil2;
  float temp;
  float humidity;
  int motion;
};
```

IMPORTANT:- The soil sensors were showing wrong values at first small numbers like 40 or 50 instead of the expected 0–4095. One line of code fixed it.

analogSetAttenuation(ADC_11db);